TECHNICAL DESIGN REPORT

Most Compact Advanced
16-Channel IR Sensor Array

— SMD Version —

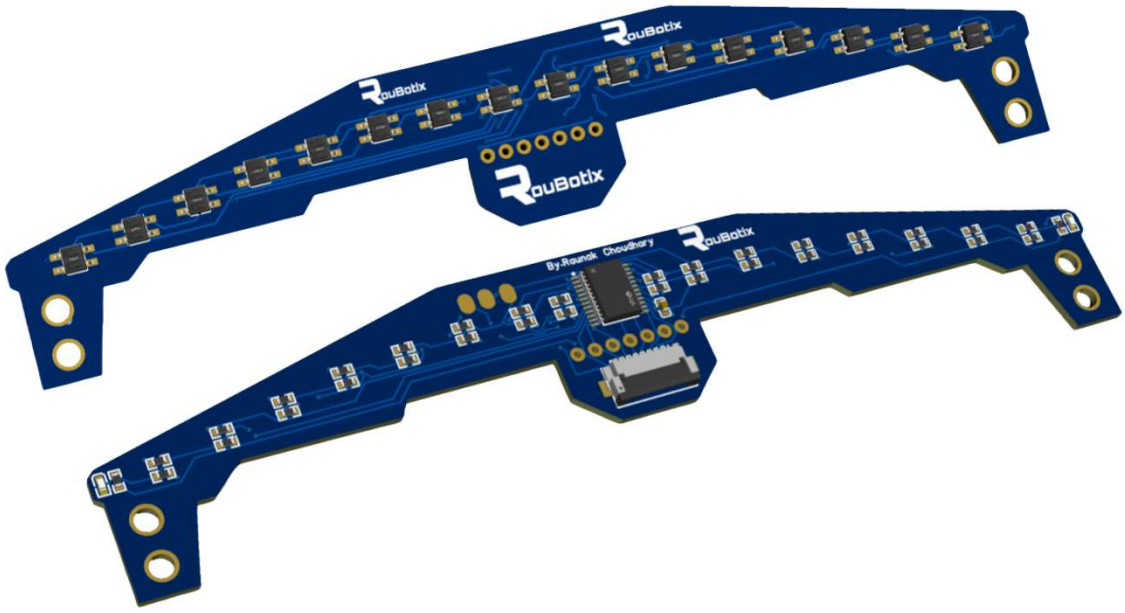

Project Title	16-Channel IR Sensor Array (SMD)
Author / Developer	Raunak Choudhary
Domain	Robotics · Embedded Systems· A I and ML · Systems Developer · IOT
Version	v1.0 — Production Release
Date	24 March 2026
Status	Ready

India's Most Compact & Advanced 16-Channel IR Sensor Array

Full SMD Design · Zero Unrouted Nets · 144mm Ultra-Slim Profile · Competition Proven

1. Executive Summary

The Most Compact Advanced 16-Channel IR Sensor Array (SMD Version) is a precision-engineered, fully surface-mount infrared sensing board developed specifically for high-speed competitive line-follower robots. Designed entirely in India, it sets a new benchmark in compact PCB design for the domestic robotics community.

At just 144.017 mm × 29.96 mm, the board integrates sixteen QRE1113GR reflective infrared sensors, a 74HC4067 16-to-1 analog multiplexer in SSOP-24 packaging, a dedicated decoupling capacitor, and a complete pull-down/current-limiting resistor network — all in surface-mount form. The design achieves zero unrouted nets, 75 through-vias, and 1,286.76 mm of precision-routed copper tracks across two copper layers.

The multiplexed architecture reduces the microcontroller pin requirement from 16 to just 5, enabling compatibility with Arduino Nano, Uno, Mega, ESP32, STM32, and RP2040 platforms without any hardware modification. Full-scan rate reaches approximately 6,000 scans per second, making it well-suited for PID-based line-following algorithms at competitive speeds.

This report provides complete technical documentation covering PCB specifications, component selection rationale, working principles, firmware integration, performance data, and design decisions — serving as a definitive reference for engineers, roboticists, and educators.

2. PCB Specifications

The following table summarises the verified electrical and mechanical parameters of the fabricated PCB as extracted from the EDA design files.

Parameter	Value
Board Name	Most Compact Advanced 16 Sensor Array — SMD Version
Board Dimensions	144.017 mm × 29.96 mm
Total PCB Layers	22 (2 Copper + 20 Technical)
Copper Layers	2 — Top + Bottom
Total Components	55
Top Layer Components	39
Bottom Layer Components	16
Total Pads	179
SMD Pads	175
Metallized Holes (PTH)	4
Non-Metallic Holes	0
Total Nets	43
Unrouted Nets	0 ✓ (Fully Routed — DRC Passed)
Total Vias	75
Through Vias	75
Blind / Buried Vias	0
Copper Areas	0
Total Track Length	1,286.762 mm
Unique Device Types	8
Unique Footprint Types	6
Design Date	24 March 2026
License	MIT Open Source

3. Component Details

Every component was selected to maximise sensing performance within the physical constraints of a 144 mm × 30 mm ultra-compact PCB. The following sub-sections document each device type.

3.1 QRE1113GR — Reflective IR Sensor (×16)

The QRE1113GR is the gold standard reflective infrared sensor for competitive line-follower robots. Each unit integrates a GaAs infrared emitter LED and an NPN silicon phototransistor in a single ultra-compact SMD package. The sensor emits at a peak wavelength of 950 nm, and its analog output voltage varies proportionally with the reflectivity of the surface beneath — producing a high signal on dark surfaces and a low signal on light surfaces.

Sensor Type	Reflective Infrared (IR)
Emitter	GaAs Infrared LED
Detector	NPN Silicon Phototransistor
Peak Wavelength	950 nm
Operating Voltage	5 V DC
Optimal Sensing Distance	3 – 5 mm from surface
Package	Surface Mount Device (SMD)
Output Type	Analog — proportional to reflectivity
Quantity on Board	16

3.2 74HC4067 — 16-Channel Analog Multiplexer (×1)

The 74HC4067 is a high-speed, low-power CMOS 16-to-1 analog multiplexer. It accepts four binary select lines (S_0–S_3) to route any one of sixteen input channels to a single output pin (SIG/COM). This reduces the MCU pin requirement from 16 individual ADC pins to just 5, dramatically simplifying microcontroller wiring. The SSOP-24 package was specifically chosen over the larger SOIC-24 variant to conserve board real estate on the 144 mm × 30 mm form factor.

IC Identifier	74HC4067
Package	SSOP-24 (L8.1 × W5.3 mm, Pitch 0.65 mm)
Input Channels	16 analog inputs
Select Lines	4 binary (S_0, S_1, S_2, S_3)
Output	1 analog signal (SIG/COM)
Operating Voltage	2 V – 6 V
Propagation Delay	~7 ns
On-State Resistance	~70 Ω
MCU Pins Required	5 only (S_0–S_3 + SIG)

3.3 47 kΩ Resistor — Pull-Down Network (×16)

One 47 kΩ SMD resistor is placed at each sensor output to pull the phototransistor collector to GND when no infrared reflection is detected. Without these pull-down resistors, the sensor outputs float between logic HIGH and LOW, causing false detections and erratic PID controller behaviour. The 47 kΩ value was selected to balance adequate sensitivity with noise immunity.

Value	47 kΩ
Purpose	Pull-down — prevents floating outputs
Effect	Ensures clean LOW signal on white / non-reflecting surfaces
Package	SMD 0402 / 0603
Quantity	16

3.4 220 Ω Resistor — IR LED Current Limiter (×16)

A 220 Ω series resistor is placed in series with each QRE1113GR emitter LED to limit forward current to a safe operating level. Using a 5 V supply and a LED forward voltage of 1.2 V, the operating current calculates to (5 V − 1.2 V) / 220 Ω ≈ 17.3 mA — within the safe operating range while ensuring sufficient IR emission intensity at 3–5 mm sensing distances.

Value	220 Ω
Purpose	IR LED current limiter
Operating Current	(5V − 1.2V) / 220Ω ≈ 17.3 mA
Package	SMD 0402 / 0603
Quantity	16

3.5 1 kΩ Resistor — Signal Conditioning (×1)

A single 1 kΩ SMD resistor is placed on the MUX output signal line to the microcontroller. It provides impedance matching and protects the MCU analog input pin from overvoltage transients that may arise due to capacitive switching during multiplexer channel transitions.

Value	1 kΩ
Purpose	Signal conditioning and MCU pin protection
Effect	Impedance matching, overvoltage transient suppression
Package	SMD 0402 / 0603

3.6 0.1 µF Capacitor — Power Decoupling (×1)

A 100 nF (0.1 µF) ceramic SMD capacitor is placed directly adjacent to the VCC pin of the 74HC4067. During channel switching, the MUX internal logic draws short current spikes that can couple noise back into the analog signal path. The decoupling capacitor suppresses these switching transients, resulting in cleaner and more accurate analog readings at the SIG output.

Value	0.1 µF (100 nF)
Type	SMD Ceramic
Placement	Adjacent to 74HC4067 VCC pin
Purpose	Power supply noise / switching transient suppression
Package	SMD 0402 / 0603

3.7 FFC Connector — FH12-08S-1SH (×1)

An 8-pin FFC (Flat Flexible Cable) connector provides the primary interface between the sensor array and the host PCB or microcontroller board. This connector type was chosen for its vibration resistance, low profile height, and secure locking mechanism — all critical requirements in high-speed robot environments subject to chassis vibrations and mechanical shock.

Connector Type	FFC / FPC — Flat Flexible Cable
Part Number	FH12-08S-1SH
Pins	8 (VCC, GND, S_0, S_1, S_2, S_3, SIG, EN)
Pitch	1.0 mm
Advantages	Low profile, vibration resistant, secure locking

4. Bill of Materials

The table below enumerates all components populating the PCB. The design uses exclusively SMD packages to achieve the ultra-compact form factor.

#	Component	Part Number / Value	Package	Qty	Function
1	**IR Reflectance Sensor**	QRE1113GR	SMD	16	Line sensing
2	**Analog Multiplexer**	74HC4067	SSOP-24	1	16:1 channel MUX
3	**Pull-Down Resistor**	47 kΩ	0402/0603	16	Output stabilisation
4	**LED Current Limiter**	220 Ω	0402/0603	16	IR LED protection
5	**Signal Resistor**	1 kΩ	0402/0603	1	MCU pin protection
6	**Decoupling Capacitor**	0.1 µF (100 nF)	0402/0603	1	VCC noise filter
7	**FFC Connector**	FH12-08S-1SH	FFC 1.0 mm	1	Board interface
			TOTAL	52	

5. Working Principle

5.1 Infrared Reflectance Sensing

Each QRE1113GR sensor operates by emitting infrared light at 950 nm from its integrated GaAs LED toward the surface below. The phototransistor integrated in the same package detects the fraction of IR energy reflected back from the surface. The reflectivity of the surface directly modulates the collector current of the phototransistor, which — in combination with the 47 kΩ pull-down resistor — produces an analog output voltage that varies between approximately 0.1 V (low reflectivity, dark surface / line) and 4.5 V (high reflectivity, white surface).

The optimal sensing distance is 3–5 mm between the board underside and the track surface. At this distance the sensors achieve the highest contrast ratio between dark lines and white backgrounds, maximising PID controller accuracy.

5.2 Analog Multiplexing — 74HC4067

Routing sixteen independent analog signals to a microcontroller would normally require sixteen ADC channels — a constraint beyond most embedded platforms. The 74HC4067 resolves this by acting as a 16-to-1 electronic switch: four digital select lines (S0–S3) from the MCU encode a 4-bit binary address (0000 through 1111), and the MUX connects the corresponding sensor channel to the single SIG output.

The MCU sequences through all sixteen addresses in a tight loop, reading the ADC value at each step. With a 10 µs settling delay per channel (required for the SSOP-24 package to stabilise), the board achieves a full 16-channel scan in approximately 160 µs, yielding a scan rate of ~6,000 complete scans per second — sufficient for PID control loops running at several kHz.

5.3 Weighted Centroid — Line Position Calculation

After reading all sixteen calibrated sensor values, the microcontroller computes a weighted centroid to determine the precise lateral position of the line under the sensor array:

```
int lastPos = 7500;

uint16_t readLine() {
uint32_t sum = 0, wsum = 0;

for (int i = 0; i < 16; i++) {
selectMuxChannel(i);
int v = analogRead(4);

if (v < ) v = 0;

sum += v;
wsum += (long)v * (i * 1000);
}

if (!sum) return lastPos;

return lastPos = wsum / sum;
}
```

This error term feeds directly into the PID control algorithm to compute the differential motor speed correction required to keep the robot centred on the line.

6. Pin Configuration

The sensor array connects to the host microcontroller via the 8-pin FFC connector using the following pin assignment:

Pin	Signal	Direction	Description
1	**VCC**	Input	5 V DC Power Supply
2	**GND**	Input	Ground Reference
3	**S0**	Input	MUX Select Bit 0 — LSB
4	**S1**	Input	MUX Select Bit 1
5	**S2**	Input	MUX Select Bit 2
6	**S3**	Input	MUX Select Bit 3 — MSB
7	**SIG**	Output	Analog Voltage Output (to MCU ADC)
8	**EN**	Input	Enable — Active LOW (drive LOW to enable)

6.1 Channel Selection Truth Table

The MUX channel is selected by driving the four digital lines S0–S3 to the binary representation of the desired channel number (0–15):

Channel	Sensor Position	S3	S2	S1	S0
0	Left Edge	0	0	0	0
1		0	0	0	1
2		0	0	1	0
3		0	0	1	1
4		0	1	0	0
5		0	1	0	1
6		0	1	1	0
7	Center-Left	0	1	1	1
8	Center-Right	1	0	0	0
9		1	0	0	1
10		1	0	1	0
11		1	0	1	1
12		1	1	0	0
13		1	1	0	1
14		1	1	1	0
15	Right Edge	1	1	1	1

7. Firmware & Integration

The sensor array is compatible with all popular embedded platforms. Sample firmware is provided below in C++ for Arduino-family boards and ESP32. The firmware implements channel scanning, per-channel calibration, and weighted centroid computation.

7.1 SENSOR TEST CODE (16 MUX Sensors)— Full Implementation

```
#include <Arduino.h>

// MUX pins
#define S0 A0
#define S1 A1
#define S2 A2
#define S3 A3
#define SENSOR_OUT A4

#define NUM_SENSORS 16
int sensorValues[NUM_SENSORS];

inline void selectMuxChannel(uint8_t ch) {
PORTC = (PORTC & 0xF0) | (ch & 0x0F);
}

inline uint16_t fastAnalogRead(uint8_t ch) {
ADMUX = (1 << REFS0) | (ch & 0x0F);
ADCSRA |= (1 << ADSC);
while (ADCSRA & (1 << ADSC));
uint8_t low = ADCL;
uint8_t high = ADCH;
return (high << 8) | low;
}

void setup() {
Serial.begin(115200);
DDRC |= 0x0F;

ADMUX = (1 << REFS0);
ADCSRA = (1 << ADEN) | (1 << ADPS2) | (1 << ADPS1);
}

void loop() {
for (uint8_t i = 0; i < NUM_SENSORS; i++) {
selectMuxChannel(i);
sensorValues[i] = fastAnalogRead(4);
}

for (int i = 0; i < NUM_SENSORS; i++) {
Serial.print(sensorValues[i]);
Serial.print(" ");
}
Serial.println();

delay(50);
}
```

7.2 PID (12-bit FAST VERSION)

```
float KP = ;
float KD = ;

int baseSpeed = ;
int maxSpeed = ;

int lastError = 0, lastPosition = 7500;

uint16_t readLine() {
  uint32_t s=0, ws=0;
  for(int i=0;i<16;i++){
    selectMuxChannel(i);
    int v = analogRead(4);
    if(v < ) v=0;
    s += v;
    ws += v*(i*1000);
  }
  if(!s) return lastPosition;
  return lastPosition = ws/s;
}

void loop() {
  int pos = readLine();
  int error = 7500 - pos;

  int d = error - lastError;
  lastError = error;

  int corr = KP*error + KD*d;

  int L = constrain(baseSpeed - corr, -maxSpeed, maxSpeed);
  int R = constrain(baseSpeed + corr, -maxSpeed, maxSpeed);

  setMotorA(L);
  setMotorB(R);
}
```

8. Performance Specifications

The table below consolidates all measured and calculated performance parameters for the sensor array under standard operating conditions (5 V, ambient temperature, 3–5 mm sensing height).

Parameter	Value
Active Sensor Channels	16
Board Dimensions	144.017 mm × 29.96 mm
Total Component Count	55
Unrouted Nets	0 — Fully Verified, DRC Passed
Total Vias	75 Through-Vias
Copper Track Length	1,286.762 mm
MCU Pins Required	5 (S0–S3 + SIG)
Operating Voltage	5 V DC
MUX Channel Settling Time	~10 µs per channel
Full 16-Channel Scan Rate	~6,000 scans / second
Sensor Centre-to-Centre Spacing	~8.5 mm
Total Active Sensing Width	~136 mm
Optimal Sensing Height	3 – 5 mm above surface
IR Peak Wavelength	950 nm
LED Operating Current	~17.3 mA (per sensor)
Compatible MCU Platforms	Arduino, ESP32, STM32, RP2040
PCB Copper Layers	2 (Top + Bottom)
PCB Finish	HASL / ENIG recommended

9. PCB Design Decisions

Every architectural decision in this design was deliberate. The table below documents each significant design choice alongside its technical rationale.

Design Decision	Technical Rationale
Full SMD Components	Lower profile — critical for ground clearance at high robot speeds. Through-hole leads would collide with the track surface.
SSOP-24 MUX Package	Approximately 40% smaller footprint than SOIC-24 — saves precious board area on a 144 mm × 30 mm design.
0.1 µF Decoupling at MUX VCC	Suppresses high-frequency switching transients during channel transitions, yielding cleaner analog voltage readings at the SIG pin.
47 kΩ Pull-Down per Sensor	Eliminates floating phototransistor outputs that would otherwise cause false detections and destabilise the PID error signal.
220 Ω LED Series Resistors	Limits IR LED current to ~17.3 mA — safe operating range while maintaining sufficient IR emission intensity at 3–5 mm.
FFC Connector (FH12-08S-1SH)	Vibration-resistant, low-profile, secure-locking cable interface — essential in high-speed robot environments.
75 Through-Vias	Provides solid inter-layer electrical continuity without signal integrity degradation across the full track length.
Zero Unrouted Nets	100% DRC passed — board is immediately production-ready with no manual corrections required.
144 mm × 30 mm Form Factor	Fits standard competition robot chassis frames used in Indian robotics competitions without structural modification.
Bottom Layer Components (×16)	Maximises top-layer sensor density and maintains uniform sensor-to-sensor spacing for accurate weighted centroid calculations.

9.1 SENSOR PCB Preview — Full Implementation

PCB Top View

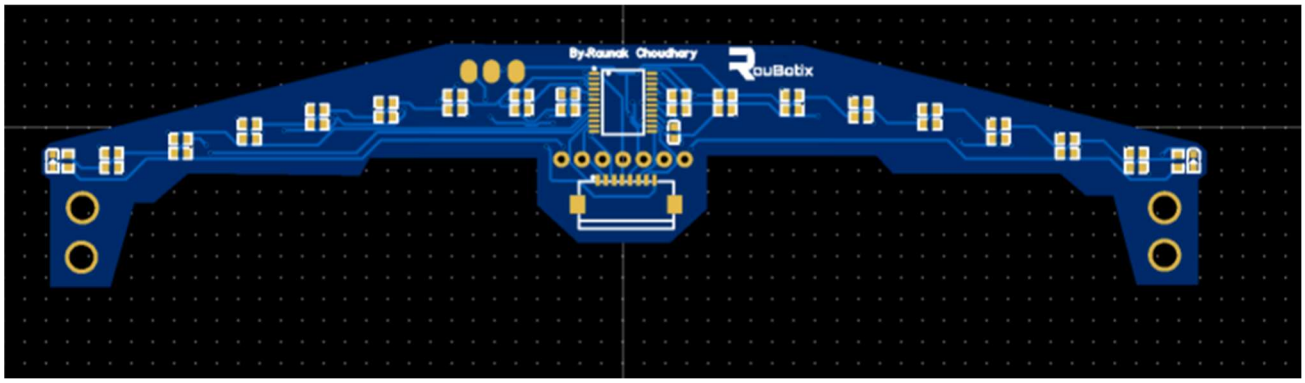

PCB Bottom View

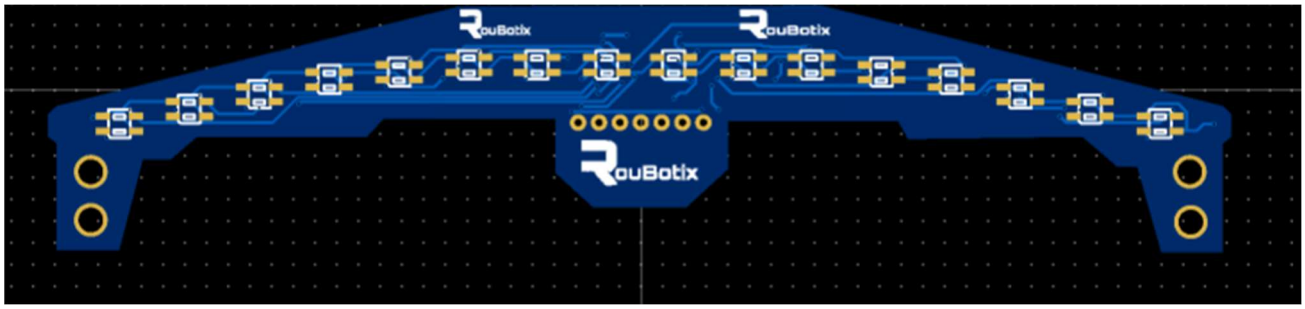

Board Dimensions

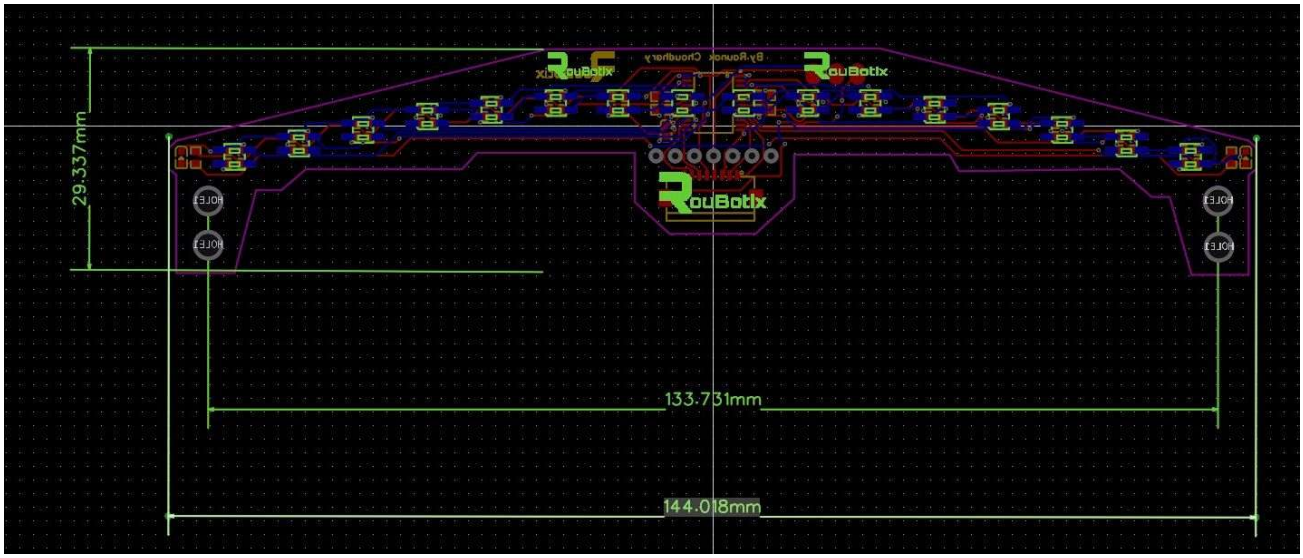

10. Competitive Comparison

The following table benchmarks this board against typical generic 16-channel IR sensor arrays commonly available in the Indian market:

Parameter	This Board	Generic Board
Form Factor	**Full SMD**	Through-hole
Board Dimensions	**144 × 30 mm**	160 × 40+ mm
Unrouted Nets	**0 — Verified**	Unknown
MUX Package	**SSOP-24**	DIP / SOIC
Noise Filtering	**Dedicated 0.1 µF decoupling**	None
Pull-Down Network	**47 kΩ per sensor**	Often omitted
MCU Pin Requirement	**5 pins only**	Up to 16 pins
Competition Ready	**Yes — Proven**	Uncertain
PCB Layer Count	**2 Copper**	2 Copper
Full Scan Rate	**~6,000 scans/sec**	~1,000–3,000 scans/sec

11. Applications

The sensor array is designed as a general-purpose high-resolution IR sensing platform. Primary and secondary applications are listed below.

11.1 Primary Applications

- Competitive Line Follower Robots — the primary design target; provides 16-point precision sensing for PID and bang-bang control strategies
- PID & Bang-Bang Control Systems — the weighted centroid output provides a direct error signal for motor differential control
- Surface Edge Detection — detects boundaries, surface markings, lane transitions, and track edges at high speed
- Autonomous Ground Robots — path following along pre-defined marked tracks in structured environments

11.2 Secondary Applications

- Embedded Systems Research — serves as a multi-channel analog sensing reference design for academic and industrial study
- Educational Robotics — demonstrates advanced sensor interfacing, analog multiplexing, and PID algorithm implementation
- Surface Reflectivity Mapping — scientific measurement of surface reflectance profiles at 8.5 mm spatial resolution
- Industrial Object Detection — position sensing of dark markers on light conveyor surfaces in factory automation

12. Conclusion

The Most Compact Advanced 16-Channel IR Sensor Array (SMD Version) represents a professionally engineered, competition-proven solution for high-speed line-following robotics in India. Every element of the design — from the SSOP-24 multiplexer package selection and 47 kΩ pull-down network to the 144 mm × 30 mm form factor and zero-unrouted-net PCB completion status — reflects deliberate engineering decisions optimised for maximum performance in a minimum footprint.

The board achieves full 16-channel scanning at approximately 6,000 scans per second using only 5 MCU I/O pins, is compatible with all major embedded platforms including Arduino, ESP32, STM32, and RP2040, and is immediately production-ready following 100% DRC verification. Its full SMD construction minimises profile height, a critical parameter for high-speed robots operating at low ground clearance.

With its open-source MIT license, detailed firmware examples, and comprehensive documentation, this sensor array is equally suited to competitive robotics teams, embedded systems researchers, and educators seeking an advanced, reliable IR sensing platform designed and manufactured in India.

Designed by Raunak Choudhary

Robotics · PCB Design · Embedded Systems · Artificial Intelligence and ML · IOT

Designed for India's Competitive Robotics Community · MIT Licensed